Rotordynamic Analysis of 120 MW Turbine Generator

DYNAMICS R4

Alfa-Tranzit Co., Ltd

TRANZIT

Bearings for quasi-nonlinear analysis

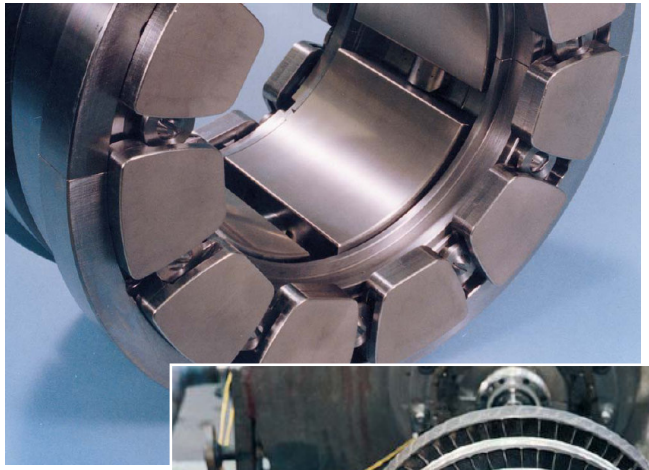

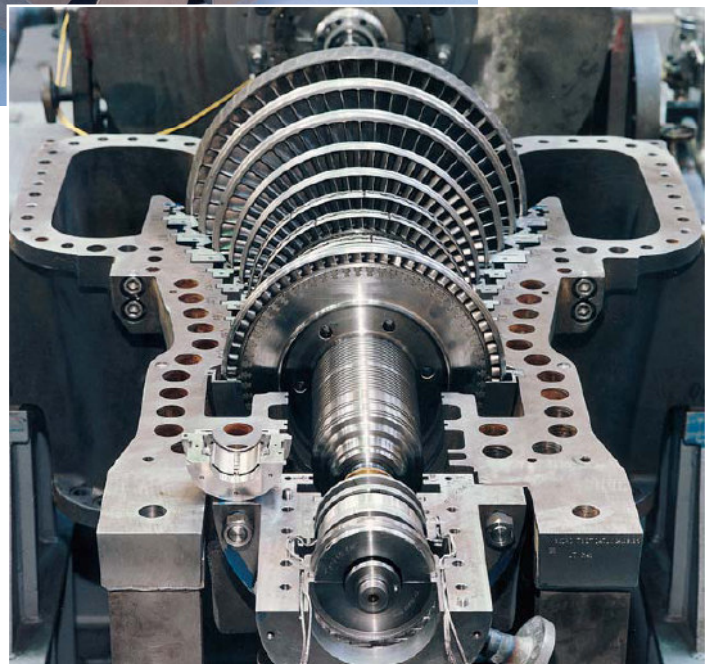

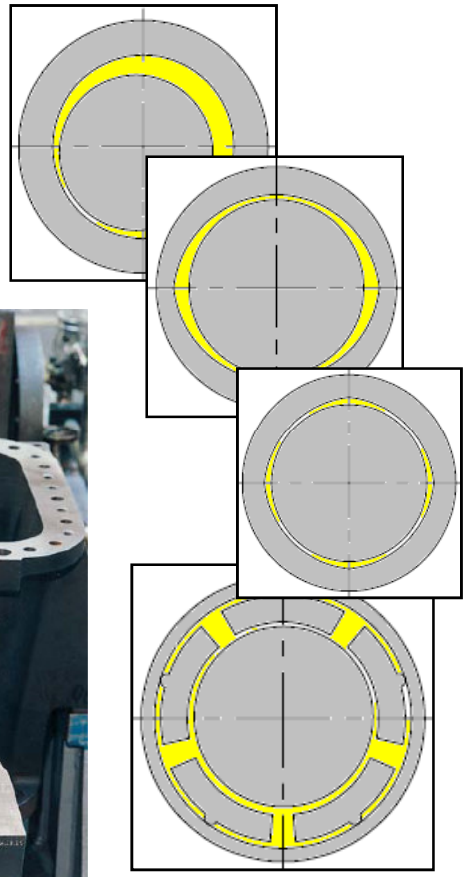

- *Plain sleeve bearings*
- *Lemon bearings*
- *Multi-lobe sleeve bearings*
- *Tilting pads*
- *etc*

Alfa-Tranzit Co., Ltd
(495)232-60-91
www.alfatran.com

Rotor model of Turbine Generator

TRANZIT

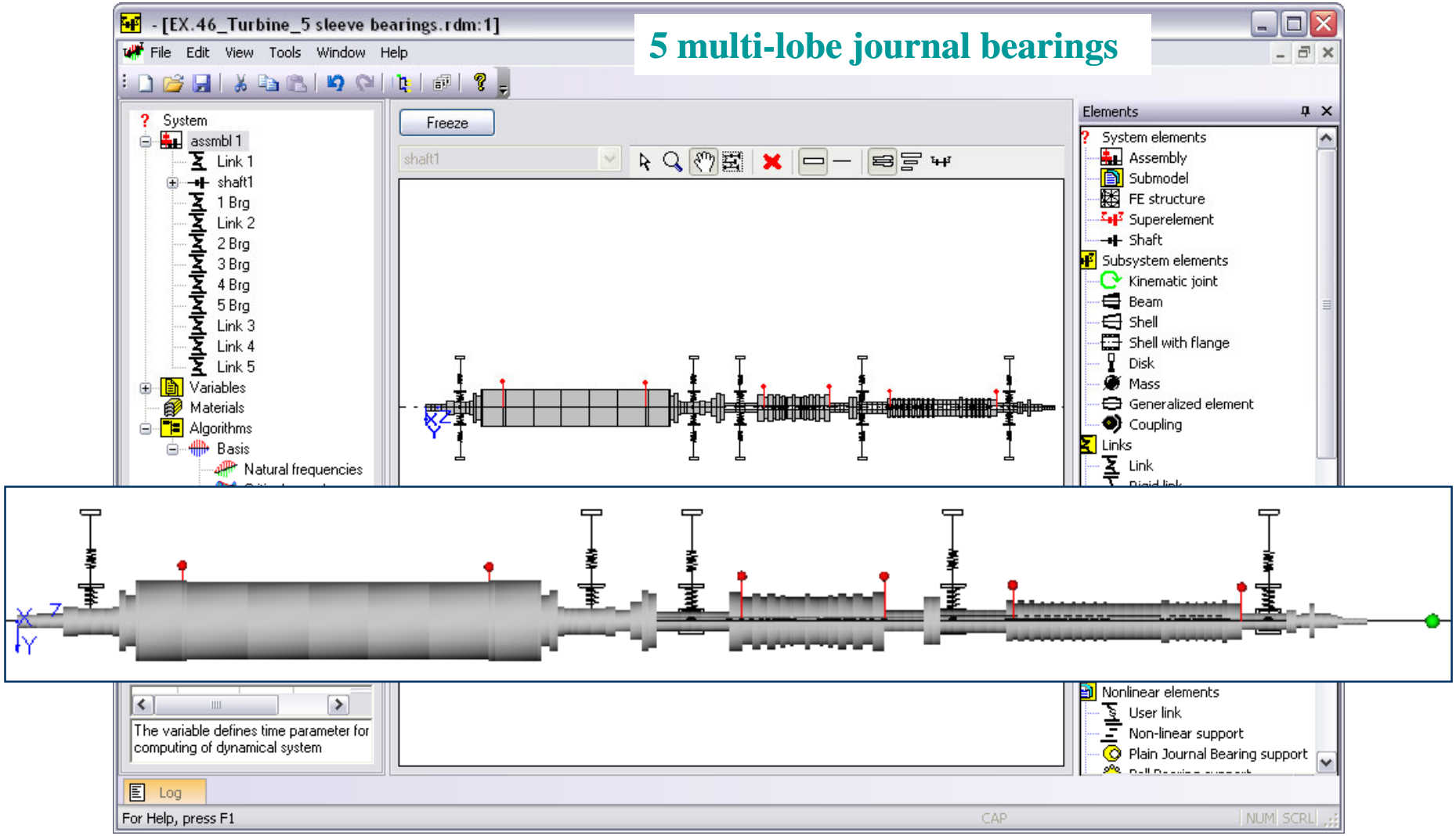

DYNAMICS R4

Alfa-Tranzit Co., Ltd
(495)232-60-91
www.alfatran.com

Bearings Stiffness and Damping Coefficients

TRANZIT

	A	B	C	D	E	F		
1	Bearing5							
2	Speed	Kxx	Kxy	Kyx	Kyy	Cxx		
3	1/min	N/m	N/m	N/m	N/m	N*s/m		
4	400	7,99E+08	-5,20E+08	-2,57E+09	5,87E+09	1,00		
5	800	8,15E+08	-3,01E+08	-2,16E+09	3,86E+09	6,43		
6	1200	8,31E+08	-1,75E+08	-1,98E+09	3,03E+09	5,03		
7	1600	8,40E+08	-7,77E+07	-1,87E+09	2,56E+09	4,30		
8	2000	8,51E+08	-393860	-1,79E+09	2,25E+09	3,80		
9	2400	8,63E+08	5,92E+07	-1,76E+09	2,08E+09	3,36		
10	2800	8,75E+08	1,19E+08	-1,72E+09	1,92E+09	3,04		
11	3200	8,87E+08	1,78E+08	-1,69E+09	1,75E+09	2,80		
12	3600	8,97E+08	2,29E+08	-1,68E+09	1,65E+09	2,62		
13	4000	9,08E+08	2,75E+08	-1,67E+09	1,58E+09	2,48E+06	-2,31E+06	-2,3
14	4400	9,18E+08	3,21E+08	-1,67E+09	1,51E+09	2,36E+06	-2,10E+06	-2,1

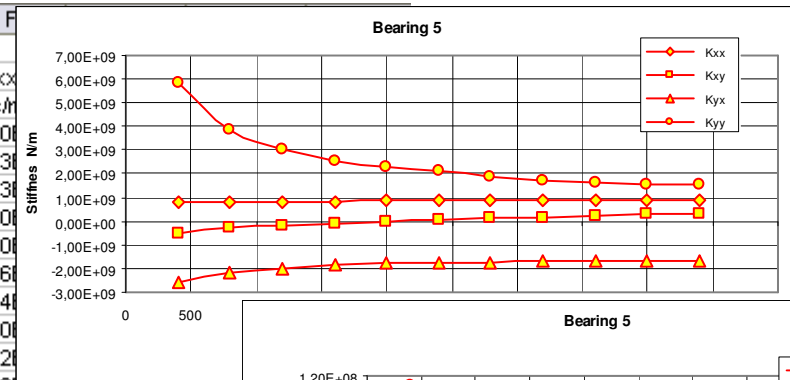

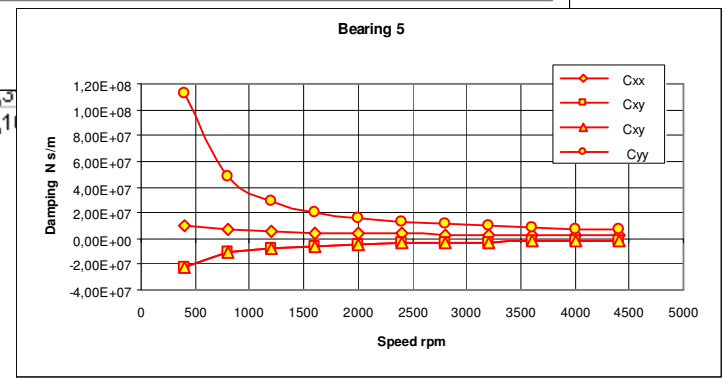

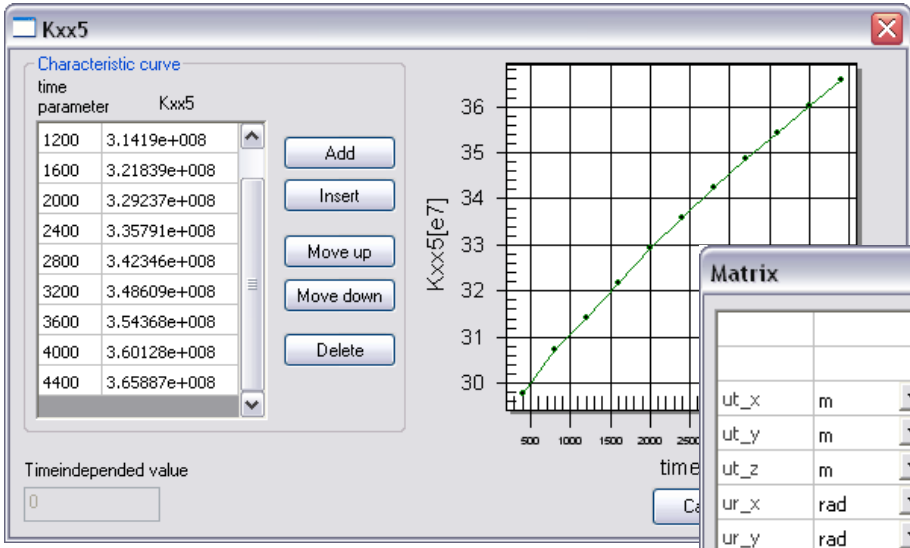

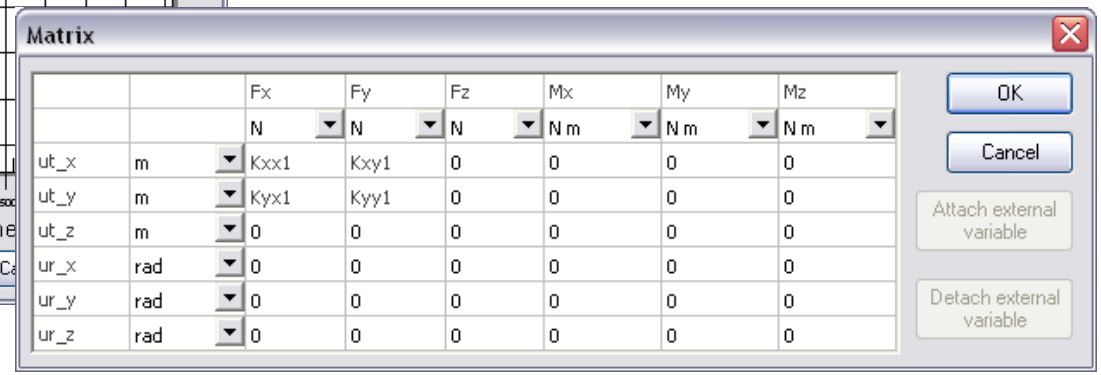

DYNAMICS R4

Alfa-Tranzit Co., Ltd
(495)232-60-91
www.alfatran.com

Natural frequencies

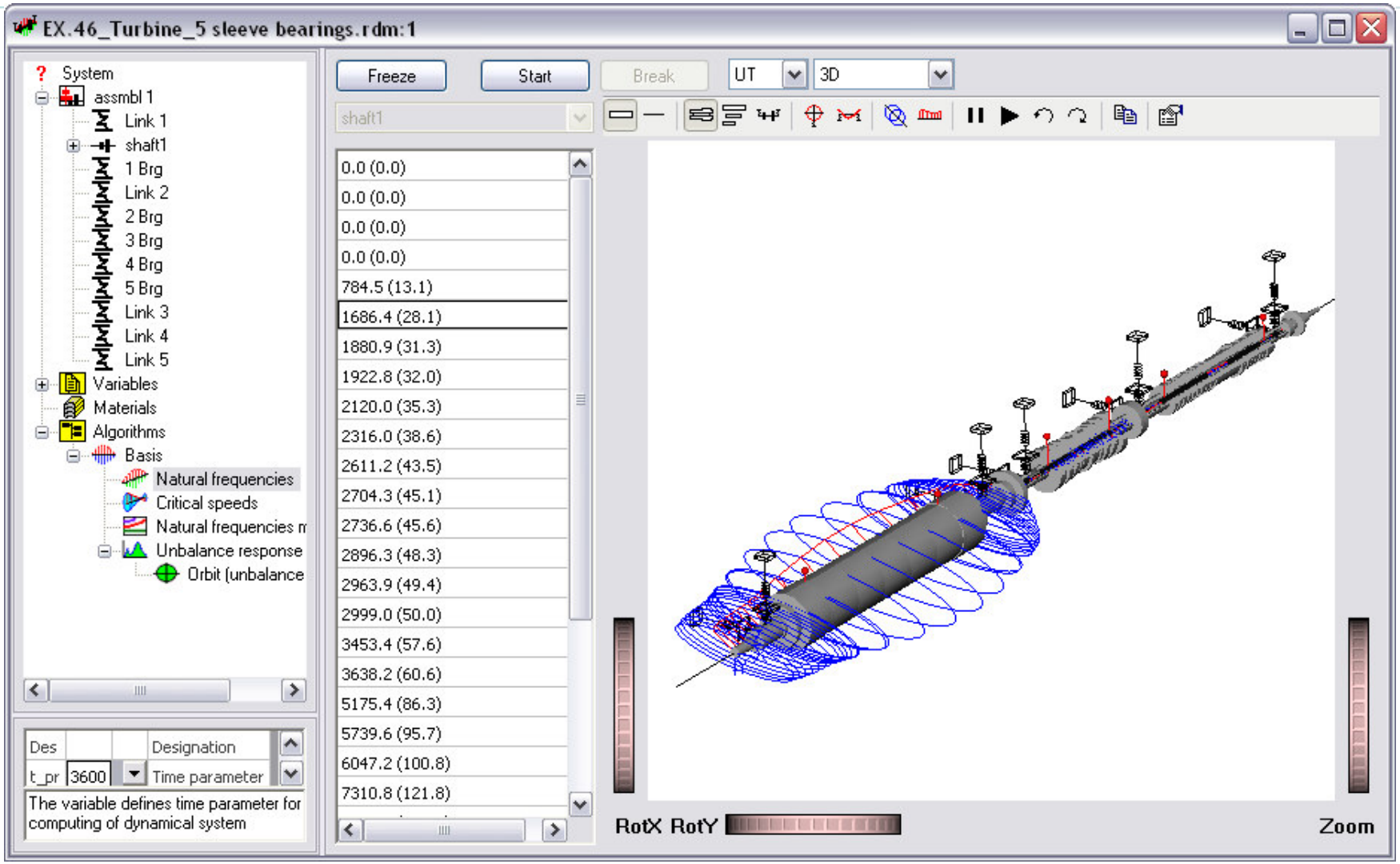

Alfa-Tranzit Co., Ltd
(495)232-60-91
www.alfatran.com

Natural frequencies and mode shapes (3600 rpm)

TRANZIT

Green orbits – forward whirls
Blue orbits– backward whirls

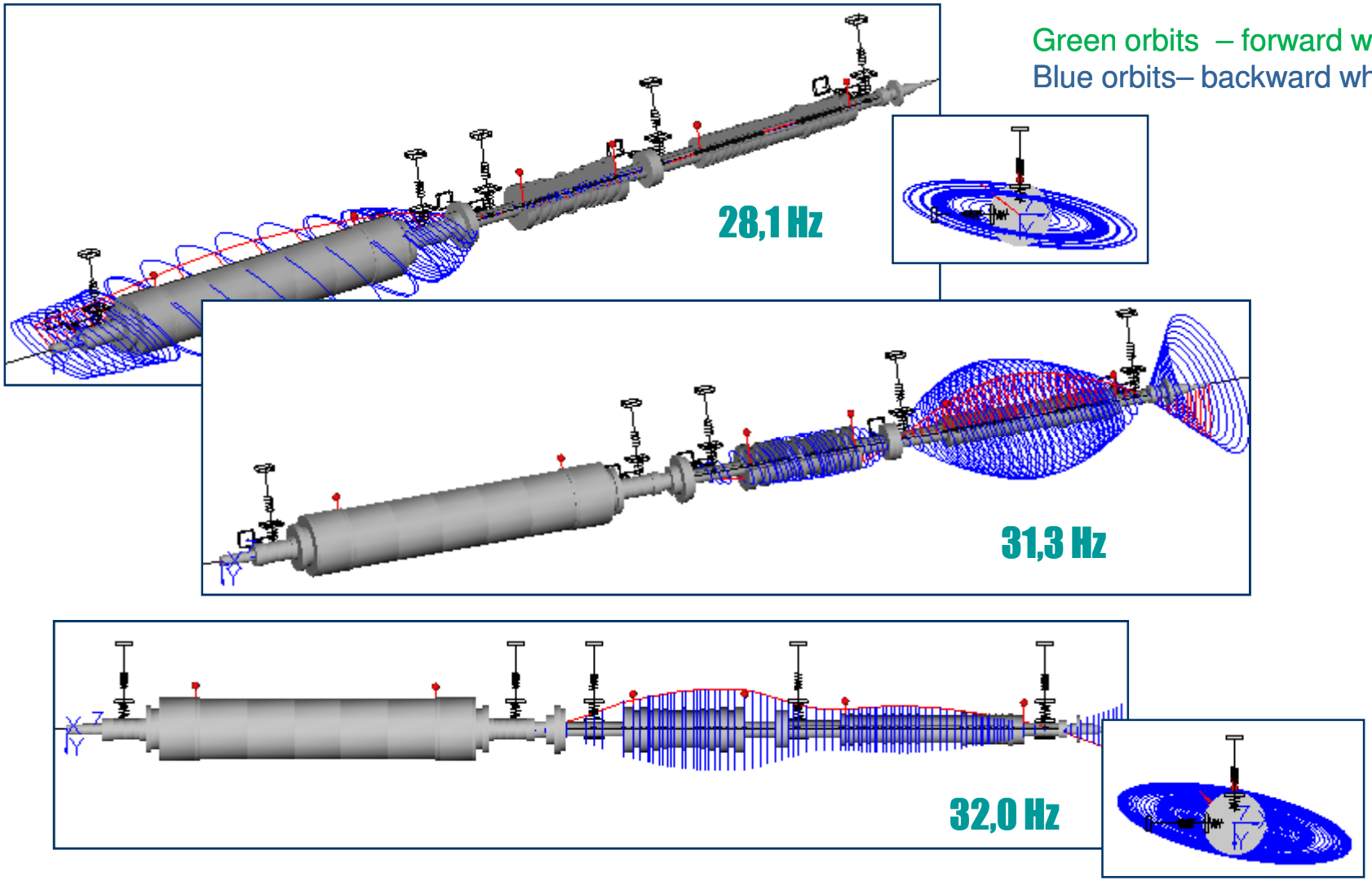

DYNAMICS R4

Alfa-Tranzit Co., Ltd
(495)232-60-91
www.alfatran.com

Natural frequencies and mode shapes (3600 rpm)

TRANZIT

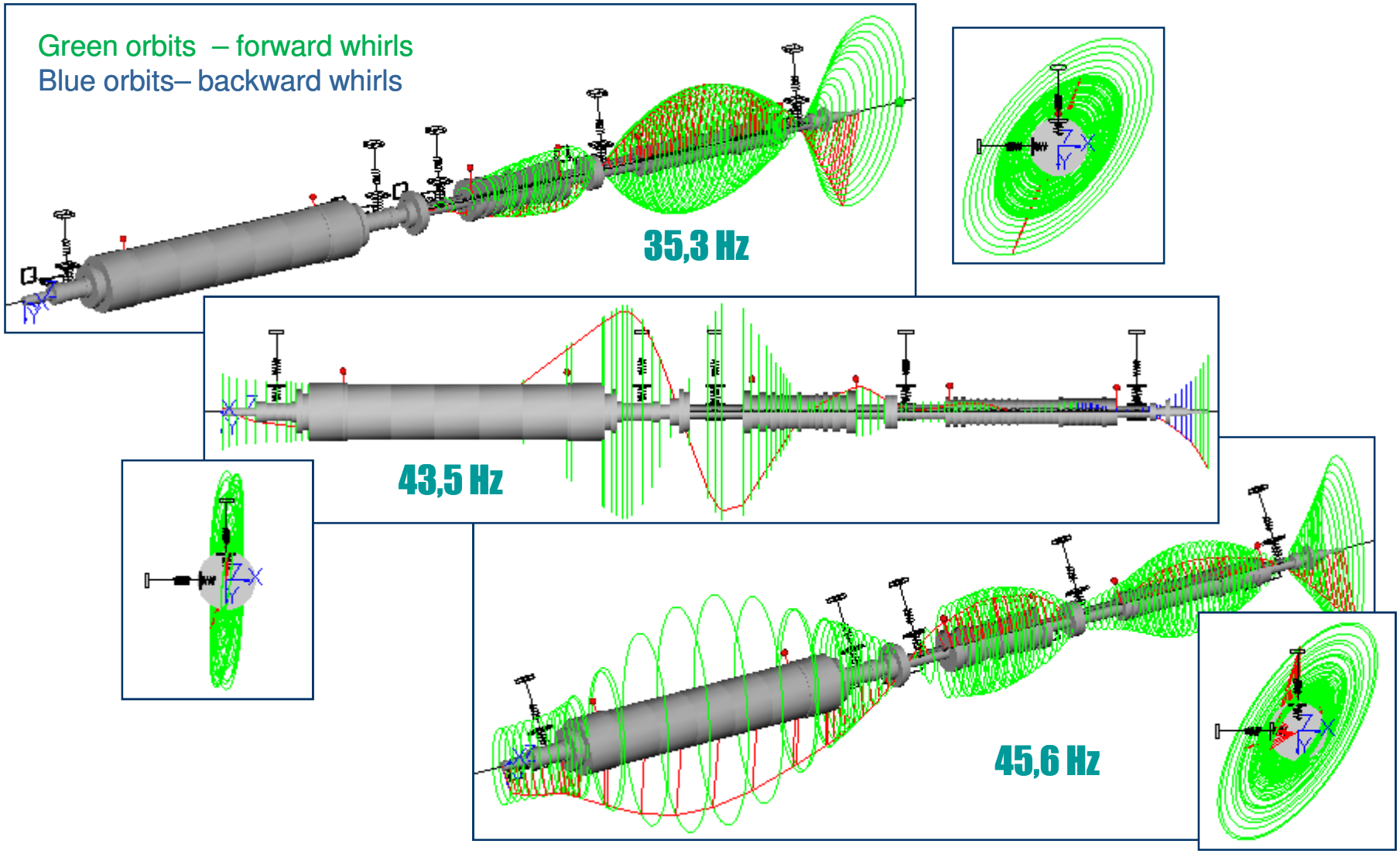

DYNAMICS R4

Alfa-Tranzit Co., Ltd
(495)232-60-91
www.alfatran.com

Natural frequencies and mode shapes (3600 rpm)

TRANZIT

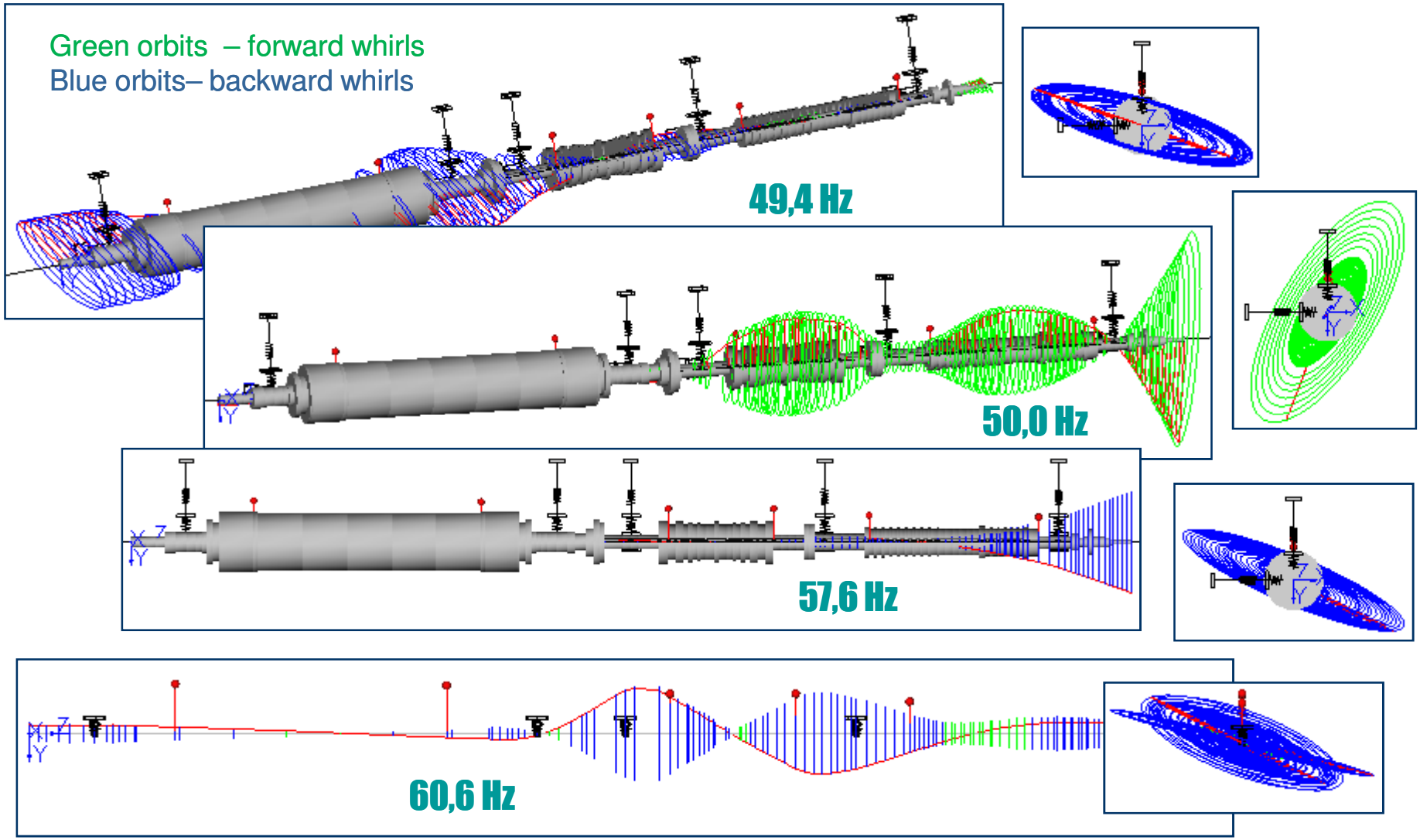

DYNAMICS R4

Alfa-Tranzit Co., Ltd
(495)232-60-91
www.alfatran.com

Natural frequencies and stability maps

TRANZIT

Stability map

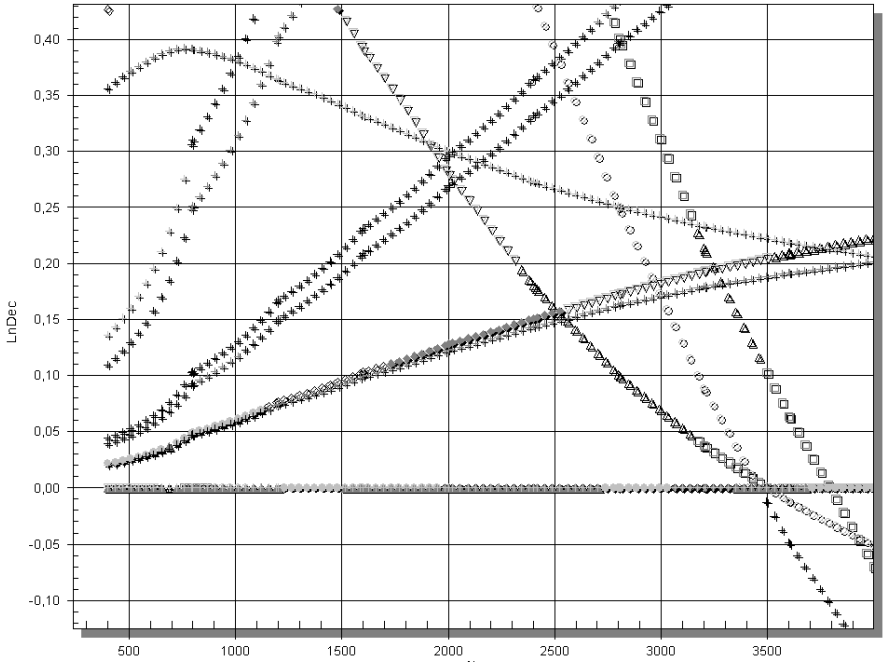

Natural frequencies map

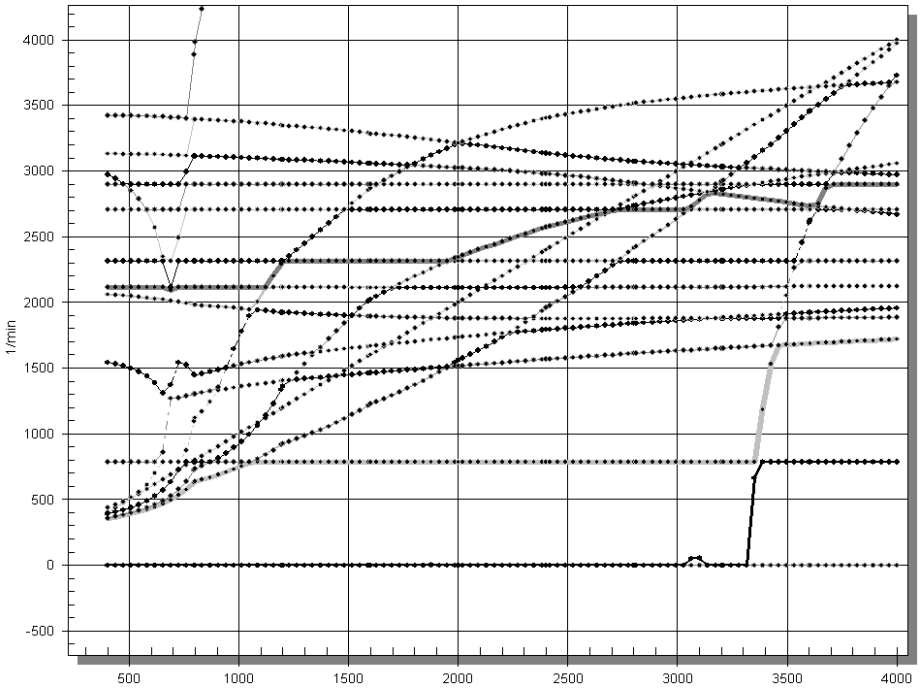

DYNAMICS R4

Alfa-Tranzit Co., Ltd
(495)232-60-91
www.alfatran.com

Unbalance response

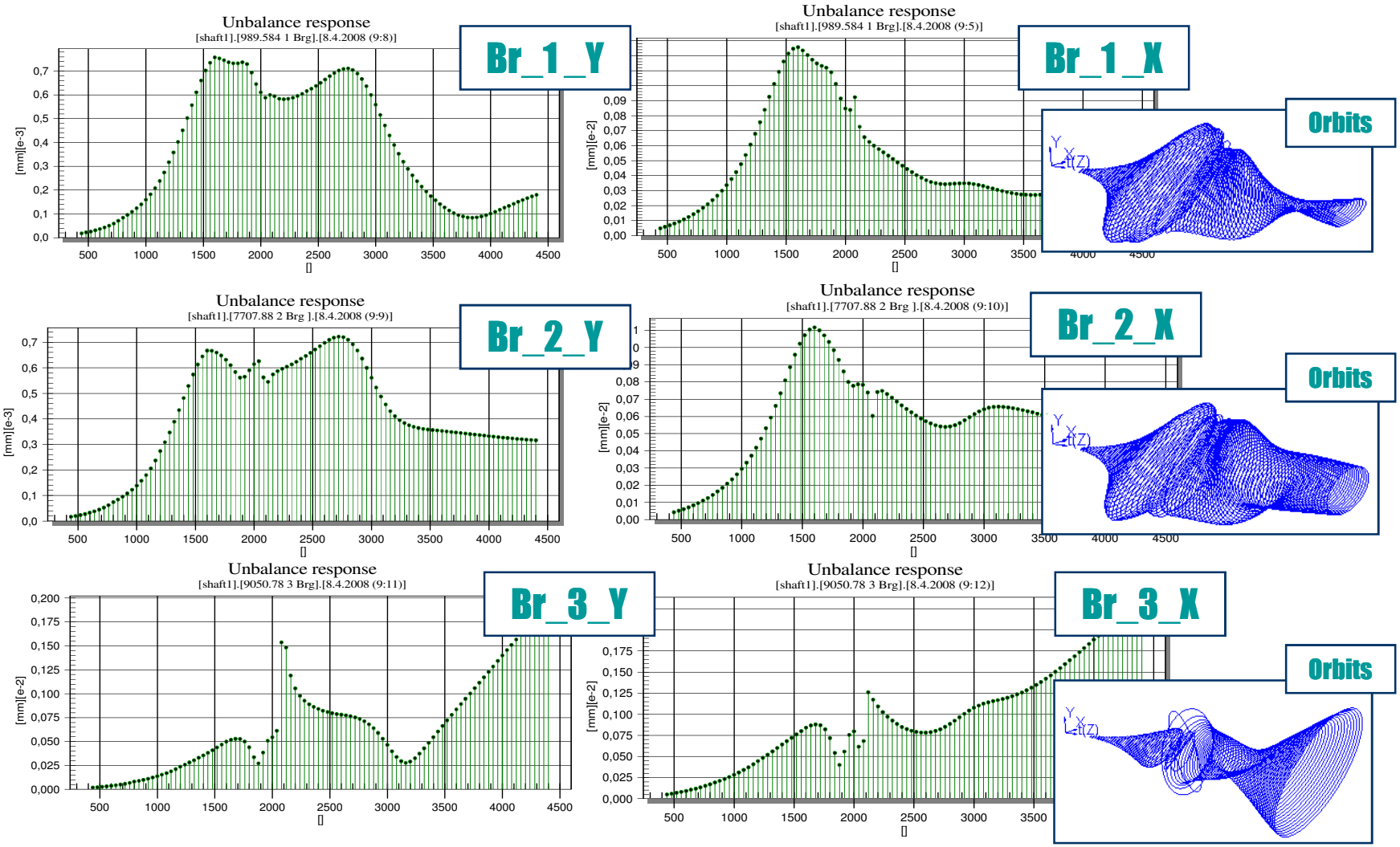

Alfa-Tranzit Co., Ltd
(495)232-60-91
www.alfatran.com

Unbalance response (3D-chart)

TRANZIT

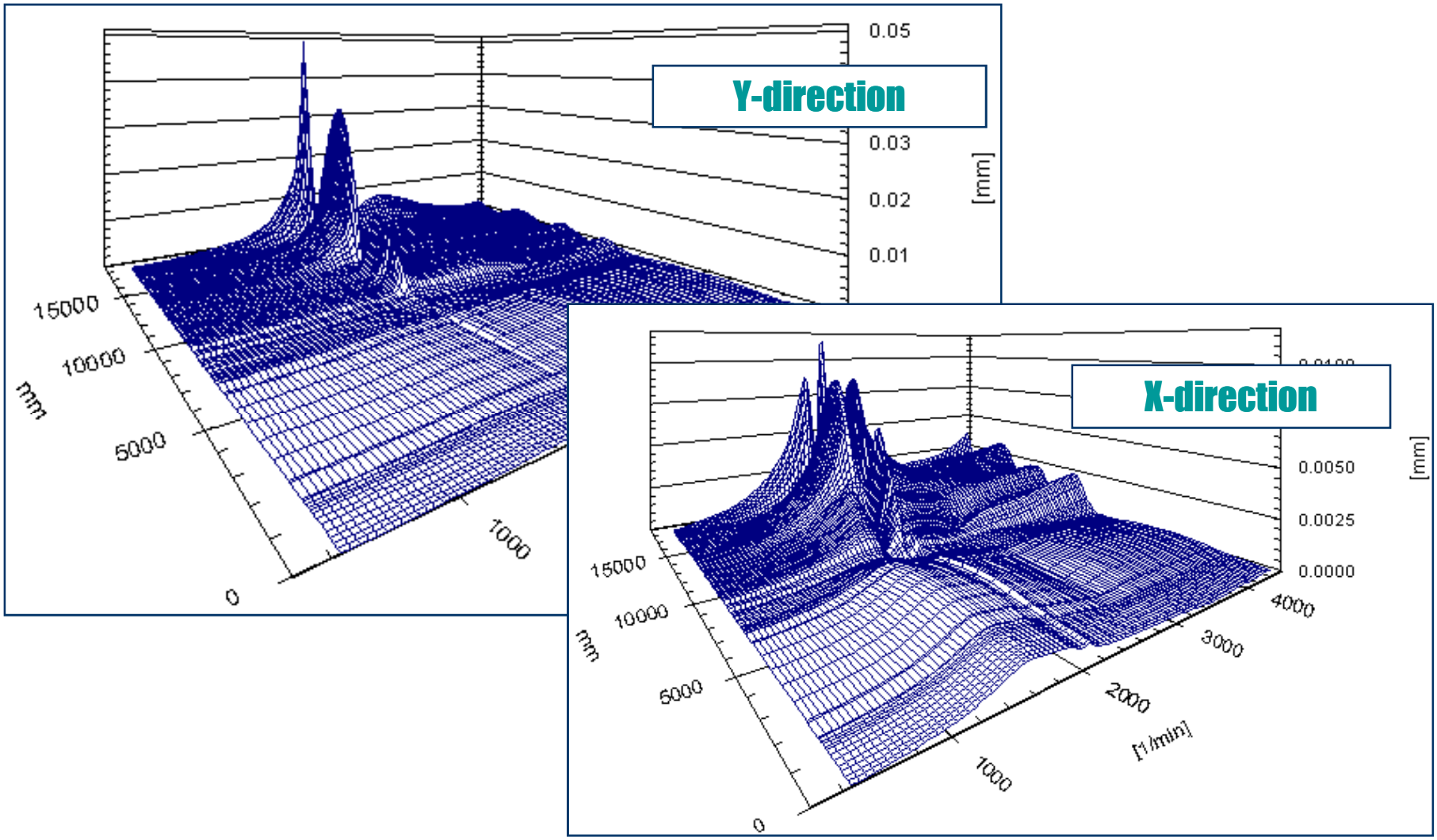

DYNAMICS R4

Alfa-Tranzit Co., Ltd
(495)232-60-91
www.alfatran.com